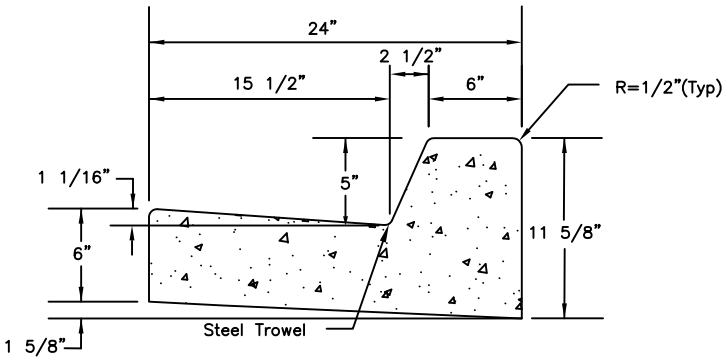

6" VERTICAL CURB (24")

(24") CURB & GUTTER

DATE	REVISIONS	BY

CITY OF BIGGS

PROVISIONAL DETAIL

202A

DAVID L. SWARTZ, P.E.
APPROVED

1/97
DATE