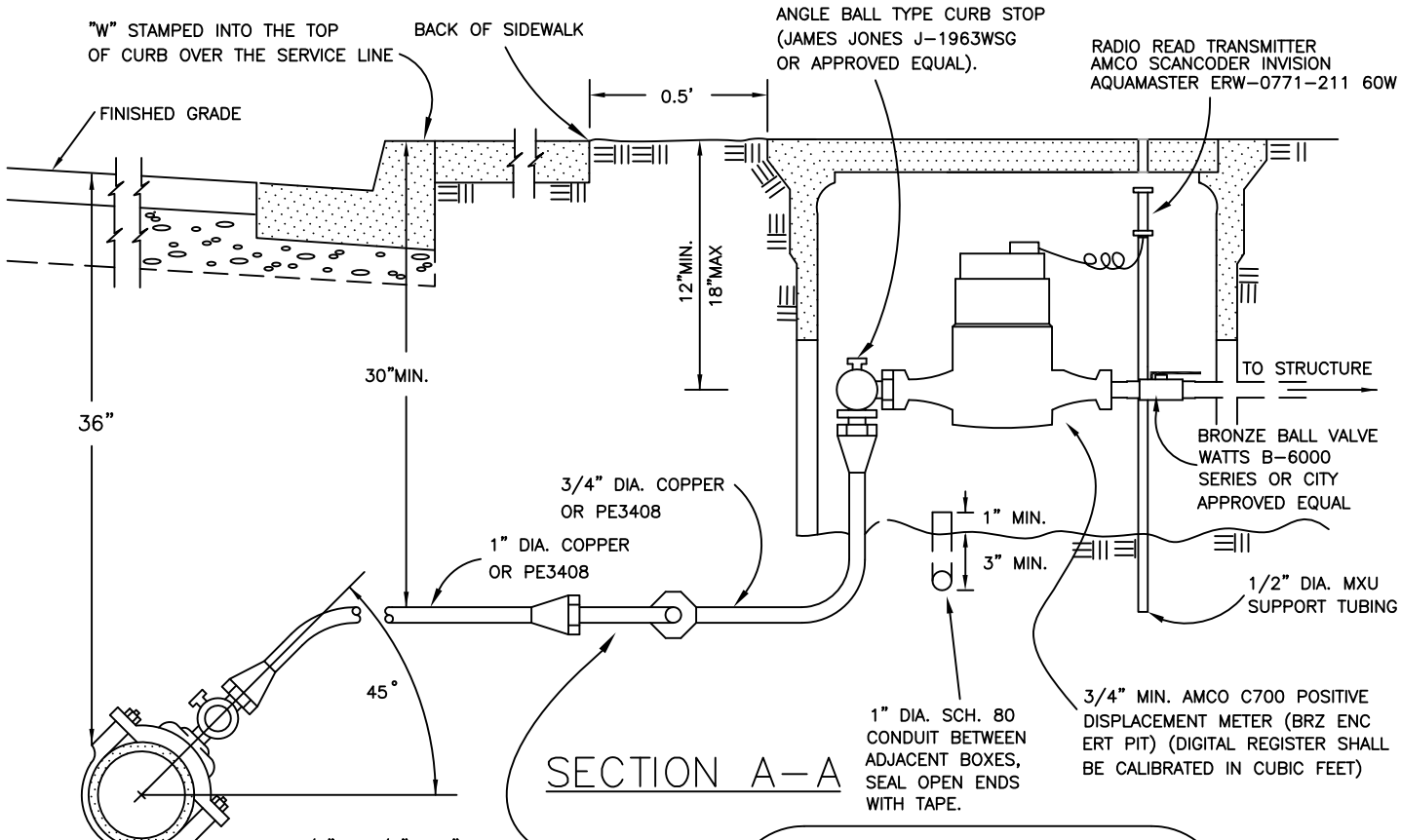

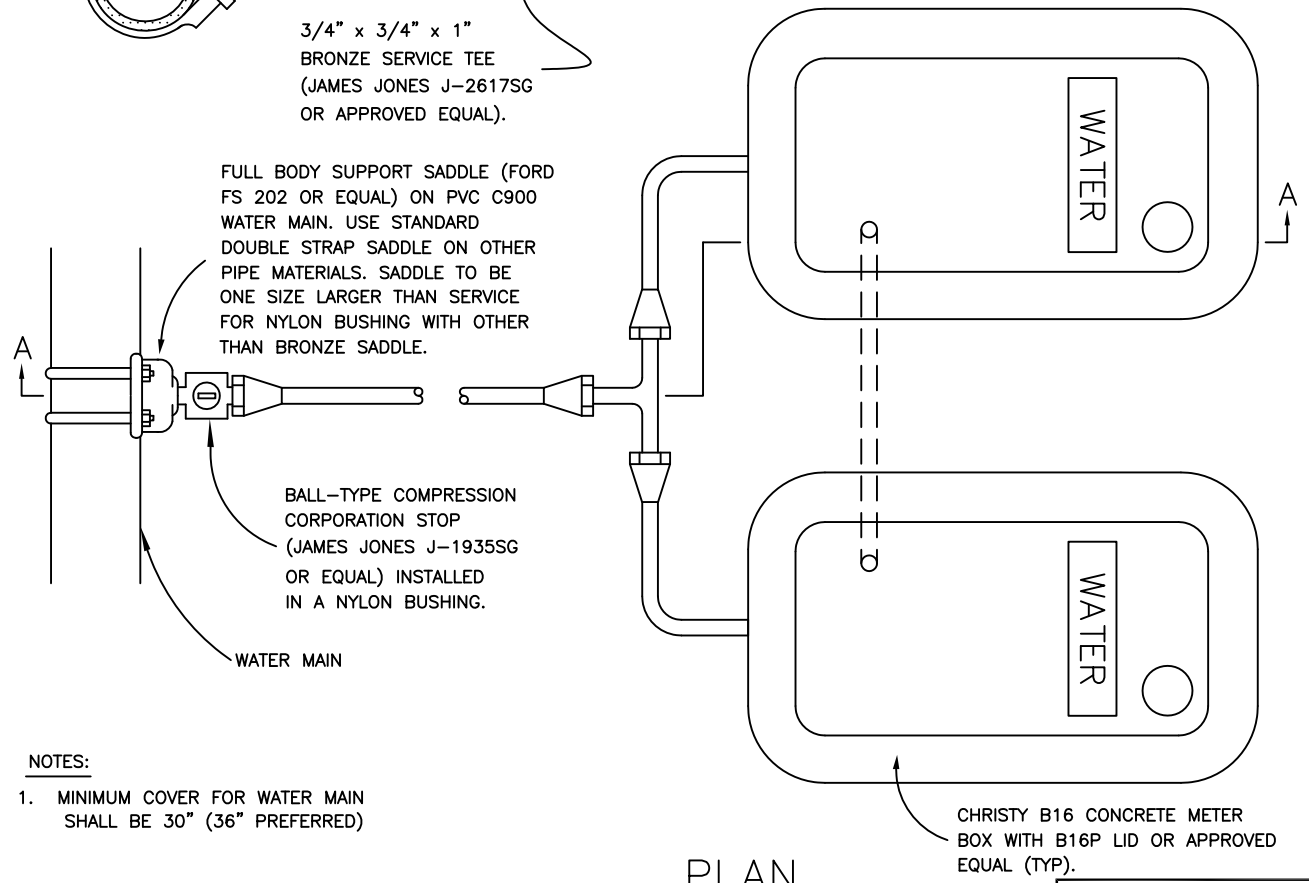

PLAN

NOTES:

1. MINIMUM COVER FOR WATER MAIN SHALL BE 30" (36" PREFERRED)

DOUBLE WATER SERVICE MAIN CONNECTION

DATE	REVISIONS	BY
6-94	LID TYPE	S.M.M.
08/02/05	NEW WATER METER	P.W.P.

CITY OF BIGGS

STANDARD DETAIL

307B

DAVID L. SWARTZ, P.E.
APPROVED

1/97
DATE